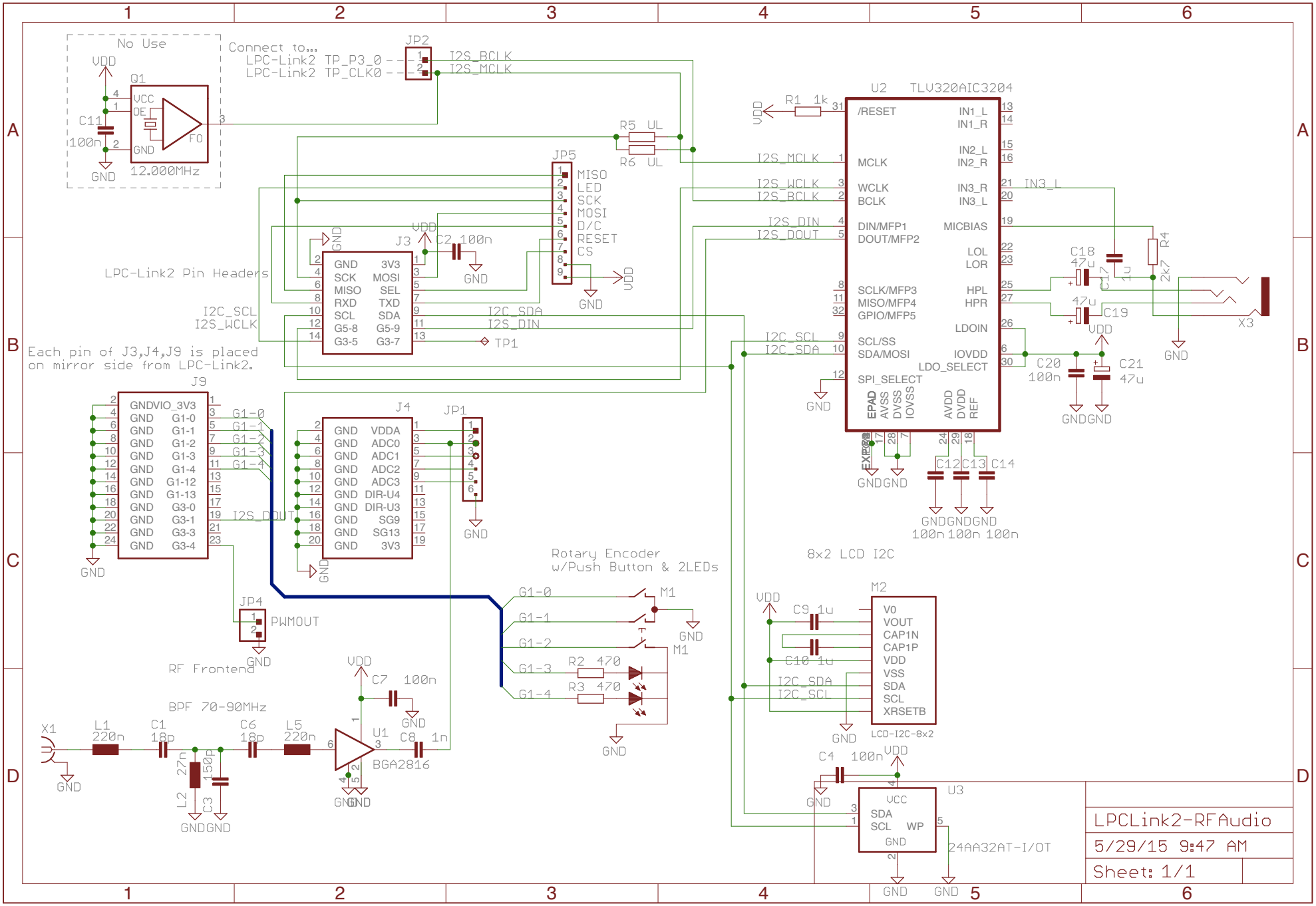
No Use
VDD
Q1
VCC
OE
FO
GND
C11
100n
12.000MHz
Connect to...
LPC-Link2 TP_P3_0
LPC-Link2 TP_CLK0
JP2
I2S_BCLK
I2S_MCLK
R5 UL
R6 UL
JP5
MISO
LED
SCK
MOSI
D/C
RESET
CS
J3
C2 100n
LPC-Link2 Pin Headers
GND SCK MISO RXD SCL G5-8 G3-5
3V3 MOSI SEL TXD SDA G5-9 G3-7
I2C_SCL
I2S_WCLK
I2C_SDA
I2S_DIN
TP1
Each pin of J3,J4,J9 is placed
on mirror side from LPC-Link2.
J9
GNDVIO_3V3 GND G1-0 G1-1 G1-2 G1-3 G1-4 G1-12 G1-13 G3-0 G3-1 G3-3 G3-4
J4
GND VDDA ADC0 ADC1 ADC2 ADC3 DIR-U4 DIR-U3 SG9 SG13 3V3
JP1
JP4
PWMOUT
RF Frontend
BPF 70-90MHz
X1
L1 220n
C1 18p
C6 18p
L5 220n
L2 27n
C3 150p
U1
BGA2816
C7 100n
C8 1n
Rotary Encoder
w/Push Button & 2LEDs
M1
R2 470
R3 470
U2 TLV320AIC3204
R1 1k
/RESET
MCLK
WCLK
BCLK
DIN/MFP1
DOUT/MFP2
SCLK/MFP3
MISO/MFP4
GPIO/MFP5
SCL/SS
SDA/MOSI
SPI_SELECT
EPAD AVSS DVSS IOVSS
IN1_L IN1_R
IN2_L IN2_R
IN3_R IN3_L
MICBIAS
LOL LOR
HPL HPR
LDOIN
IOVDD
LDO_SELECT
AVDD DVDD REF
IN3_L
C18 47u
C17 1u
R4 2k7
C19 47u
X3
C20 100n
C21 47u
C12 C13 C14
100n 100n 100n
8x2 LCD I2C
M2
C9 1u
C10 1u
V0 VOUT CAP1N CAP1P VDD VSS SDA SCL XRSETB
LCD-I2C-8x2
C4 100n
U3
VCC SDA SCL WP GND
24AA32AT-I/OT
LPCLink2-RFAudio
5/29/15 9:47 AM
Sheet: 1/1